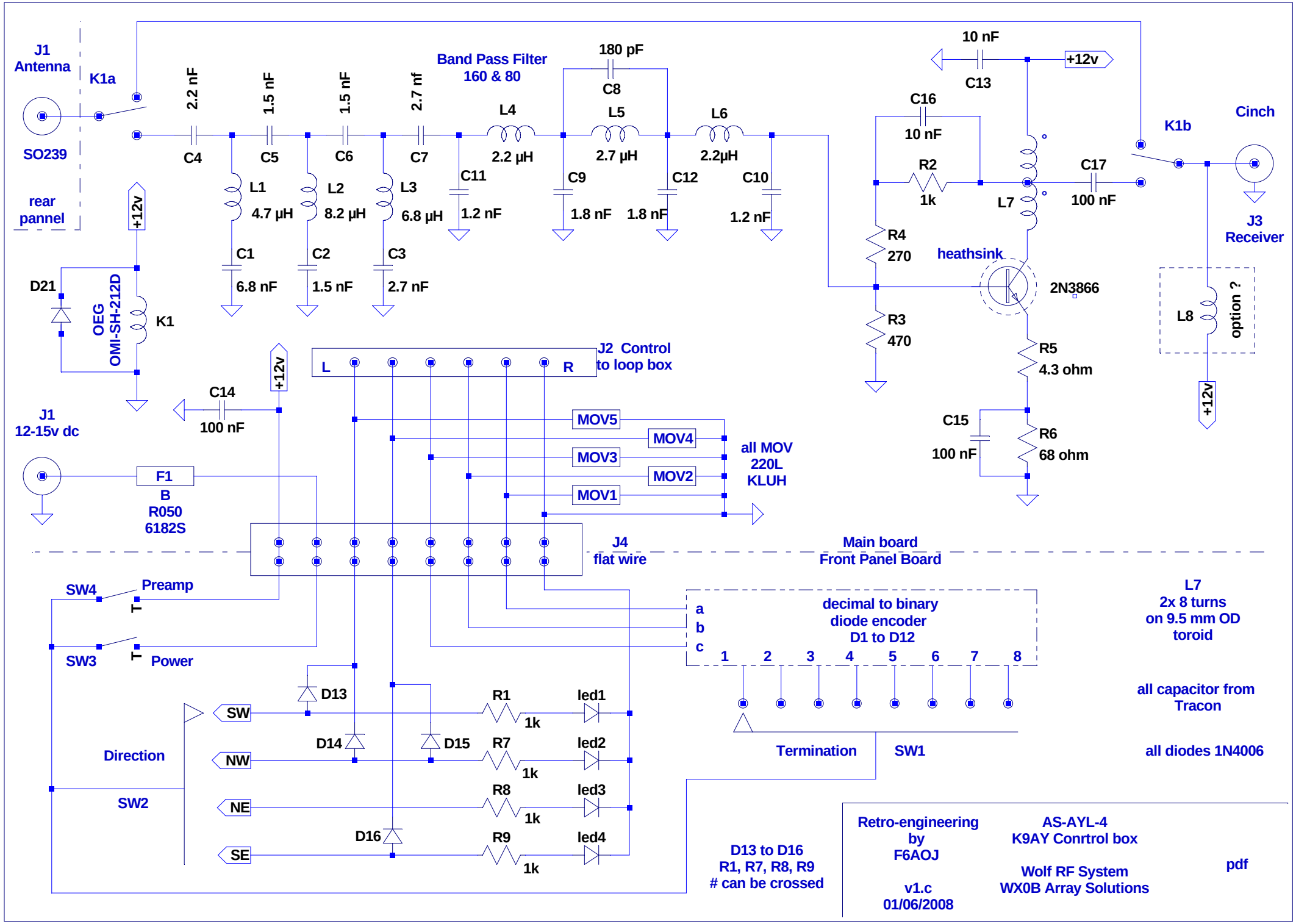
J1
Antenna
SO239
rear
pannel
K1a
2.2 nF
1.5 nF
1.5 nF
2.7 nf
Band Pass Filter
160 & 80
180 pF
C8
L4
L5
L6
C4
C5
C6
C7
2.2 µH
2.7 µH
2.2µH
C11
C9
C12
C10
1.2 nF
1.8 nF
1.8 nF
1.2 nF
L1
4.7 µH
L2
8.2 µH
L3
6.8 µH
C1
6.8 nF
C2
1.5 nF
C3
2.7 nF
+12v
D21
OEG
OMI-SH-212D
K1
10 nF
C13
+12v
C16
10 nF
R2
1k
L7
C17
100 nF
K1b
Cinch
J3
Receiver
R4
270
heathsink
2N3866
R3
470
R5
4.3 ohm
L8
option ?
+12v
C15
100 nF
R6
68 ohm
J2 Control
to loop box
L
R
+12v
C14
100 nF
J1
12-15v dc
F1
B
R050
6182S
MOV5
MOV4
MOV3
MOV2
MOV1
all MOV
220L
KLUH
J4
flat wire
Main board
Front Panel Board
SW4
Preamp
T
SW3
T
Power
a
b
c
decimal to binary
diode encoder
D1 to D12
1
2
3
4
5
6
7
8
Termination
SW1
L7
2x 8 turns
on 9.5 mm OD
toroid
all capacitor from
Tracon
all diodes 1N4006
D13
SW
R1
1k
led1
D14
D15
R7
1k
led2
Direction
NW
SW2
NE
R8
1k
led3
D16
R9
1k
led4
SE
D13 to D16
R1, R7, R8, R9
can be crossed
Retro-engineering
by
F6AOJ
v1.c
01/06/2008
AS-AYL-4
K9AY Conrtrol box
Wolf RF System
WX0B Array Solutions
pdf